Homewood Products Corporation

INSTRUCTION BOOK
Type DA Air Circuit Breaker

(formerly Westinghouse Electric Corporation)
820 Washington Boulevard
Pittsburgh, PA 15206 (USA)
www.homewoodsales.com

E-mail: sales@homewoodsales.com
Phone: 1-800-777-1172 or 412-665-2700
Fax: 412-665-2760

Permission to use, copy and distribute the documentation published by Homewood Products Corporation on this World Wide Web server is hereby granted on the condition that each copy contains this copyright notice in its entirety and that no part of the documentation is used for commercial purposes but restricted to use for information purposes within an organization.

All information published on this world wide web server is provided as is without any representation or warranty of any kind either express or implied including but not limited to implied warranties for merchantability, fitness for a particular purpose or non-infringement. Any Homewood Products Corporation documentation may include technical inaccuracies or typographical errors. Changes and additions may be made by Homewood Products Corporation from time to time to any information contained herein.

© Copyright 2001 Homewood Products Corporation. All rights reserved.

Publication I.B. 5943-A November, 1953

TYPE DA AIR CIRCUIT BREAKER

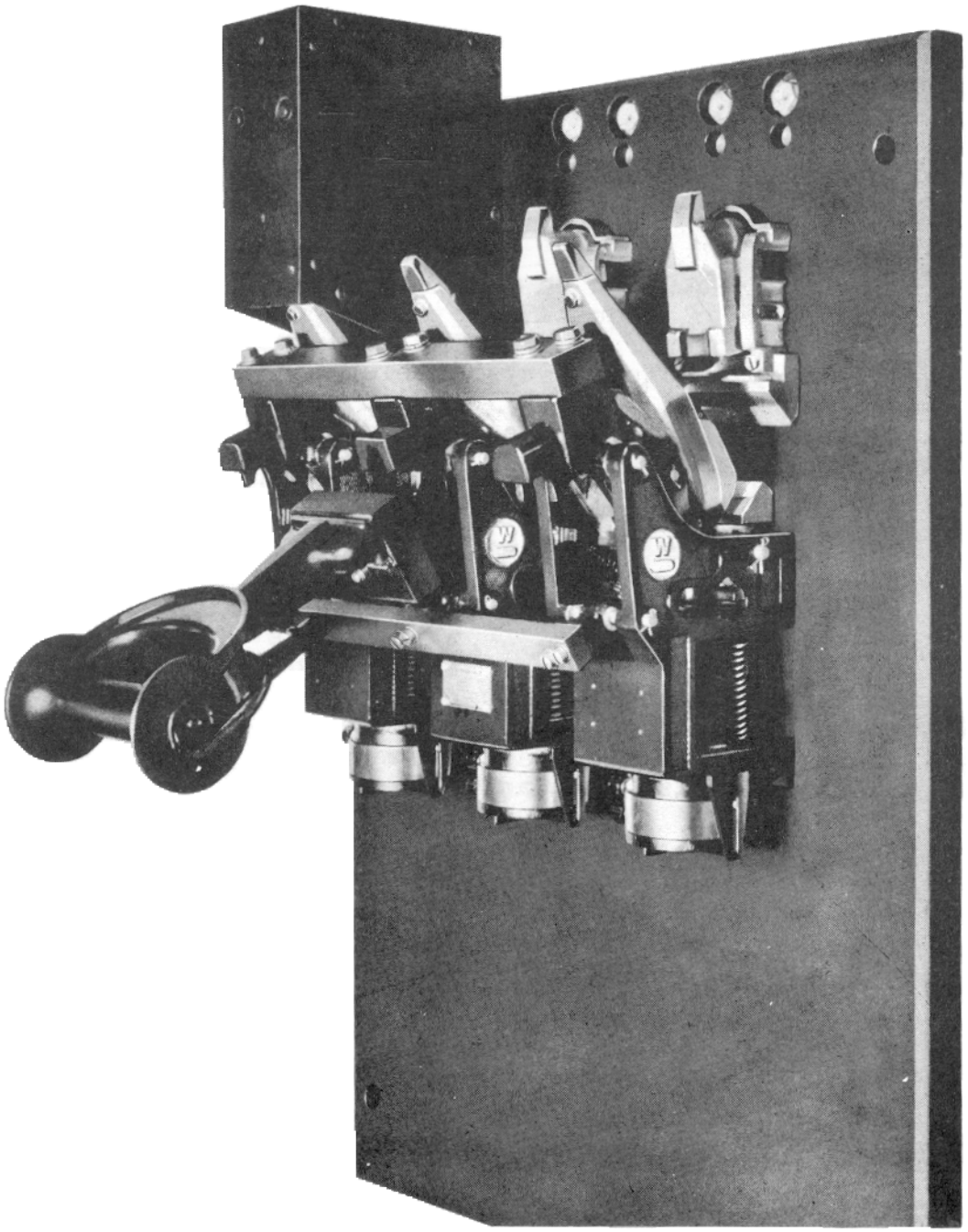

Frontispiece
Type DA 50, Three-Pole Air Circuit Breaker

Westinghouse Electric Corporation
East Pittsburgh, Pa.

Printed in U.S.A. (Rep. 11-53)

I.B. 5943 A

Filing No.35-200

PREFACE

It would be difficult to over-emphasize the importance of adequate care of all protective devices. To assure proper functioning, they should be the subject of periodical, systematic and intelligent inspection. Even the smallest details of required maintenance should not be neglected if costly failures of equipment and service are to be avoided. Maintenance must include occasional checks on calibration as well as on the coordination and freedom of all moving parts. The purpose of this Instruction Book on the DA circuit breakers is to provide a guide for those charged with these responsibilities. It is not possible to outline a procedure that will apply in all cases. The frequency and character of inspection will for the most part be a matter of experience. In general, light monthly inspection, with a thorough inspection semi-annually, should be a minimum. The Company will be glad to furnish such additional information as may be needed to amplify or clarify these instructions.

INDEX

Description	Page
Protection From Dust .	1
Unpacking.	1
Lubrication.	1
Installation	1
Adjustment of Main Contacts. . .	2
Adjustment of Contact Arm. . . .	2
Adjustment of Contact Sequence .	2
Adjustment of Arc Chamber. . . .	3
Adjustment of the Trip Bar Assembly.	3
Adjustment of Auxiliary Switch	3
Adjustment of Field Discharge Switch	3
Adjustment of Closing Linkage.	4
Adjustment of the Closing Magnet Cut-Off Switch.	4
Control Schemes.	4
Suggestions for Locating Cause of Improper Operation . . .	5
Suggestions on Removal of Parts.	6
Series Overload Trip Attachments	8
Non-Adjustable Short-Circuit Trip Attachment .	8
Instantaneous Trip Attachment.	9
Inverse Time Limit Attachment.	9
Shunt Trip Attachment.	10
Undervoltage Trip Attachment . .	10
Reverse Current Trip Attachment.	11

LIST OF ILLUSTRATIONS

Frontispiece	- DA-50 Three Pole Air Circuit Breaker
Figure 1	- DA-50 Pole Unit
Figure 2	- DA-75 Pole Unit
Figure 3	- DA-100 Pole Unit
Figure 4	- Auxiliary Switch
Figure 5	- 3-inch Closing Magnet
Figure 6	- Field Discharge Switch
Figure 7	- Instantaneous Trip Attachment
Figure 8	- Characteristic Curves - Inverse Time Limit Device
Figure 9	- Undervoltage Trip Attachment
Figure 10	- Inverse Time Limit Overload Attachment
Figures 11,12,13	- Diagram Information-Breaker Control Schemes
Figure 14	- Reverse Current Trip Attachment

TYPE "DA" AIR CIRCUIT BREAKER

PROTECTION FROM DUST

1. Excessive deposits of dust and dirt in the operating parts of a circuit breaker invariably cause binding of shafts, triggers, rollers and pins as well as the operating levers. Care should be taken, therefore, to see that accumulation of dirt is prevented and this is particularly true in new installations where the circuit breakers have been installed before the building construction work has been completed. In the latter case the breakers should be completely covered by a tarpaulin to prevent plaster and like material from falling on them.

UNPACKING

2. Care should be used in uncrating so that no parts are damaged or broken. All dirt which may have collected on the breakers should be removed. Wipe contact surfaces with a cloth or waste to remove grease used to protect contacts during shipment. A careful inspection should be made to make sure that none of the parts have been damaged in transit.

LUBRICATION

3. Lubrication of the various parts of the mechanism as applied at the factory should be sufficient for years of service It should be remembered that oily surfaces promote the accumulation of dirt and for that reason contact surfaces should be kept free from oil or grease. (Refer to paragraph 2). Therefore, it is recommended that no lubricants be applied to the breaker mechanism.

INSTALLATION

4. It is preferable that air circuit breakers be shipped on permanent bases instead of temporary bases to eliminate the additional labor and the possibility of misalignment and improper adjustment.

5. In those cases where remounting is necessary, care should be taken to avoid dismantling further than necessary and thus preserve the adjustments and avoid incorrect assembly.

6. Each pole unit retains shaft alignment independently on the panel due to the one-piece construction of the frame (see Fig. 1, 2 and 3). However, when mounting multipole breakers, care must be taken so as to align the frames with respect to each other so that the common crossbar and trip bar operate freely. This alignment may be obtained by inserting a round steel bar of suitable diameter and length simultaneously through the holes of all frames from which the main fulcrum pins have been removed. Before tightening the frame mounting bolts, check the location of the frames of outer poles with respect to holes in the panel which receive the arc tip springs.

7. It is important that connecting bus be of sufficient current carrying capacity and that connections to the breaker be properly joined. Obviously heat conducted into a breaker from a hot joint will increase the temperature rise of the breaker.

8. Connecting cables or bus should be well supported and braced so that the breaker studs will not be subjected to unnecessary strain as a result of magnetic forces set up by short circuit currents.

ADJUSTMENT OF MAIN CONTACTS

9. Inherent to their design the main contact bridging members are self-aligning to a considerable degree provided stationary contact surfaces and the breaker frame are assembled properly, as described above.

10. Pressure between the silver contact surfaces is obtained by a compression spring which requires no adjustment other than that given to the complete contact arm assembly.

ADJUSTMENT OF CONTACT ARM

11. To adjust the contact arm the completely assembled breaker should be placed in a partially closed position. After the bolt which clamps the eccentric pin is loosened the eccentric pin should be turned to a position which brings the inside surface of the contact arm parallel to the panel when the breaker is in the closed position. The dimension between this machined surface and the panel which makes them parallel on each frame size are shown in figures 1, 2 and 3. If the breaker has more than one pole, partially close the breaker to the point where at least one set of arcing contacts touch, then reset the eccentric pins of each pole to cause the arcing contacts of all poles to "make" at the same time by moving one arm closer to the panel and one arm away from the panel. Care should be taken to securely lock the eccentric pin again before operating the breaker. Before this adjustment should be considered complete, inspection should be made to make sure that all floating contact members remain free. This check is readily made by prying each set of contacts gently apart with the aid of a large screw driver or similar tool, being careful not to mar the contact surfaces.

ADJUSTMENT OF CONTACT SEQUENCE

12. IT IS VERY IMPORTANT THAT ADEQUATE SEPARATION IS OBTAINED BETWEEN MAIN CONTACT SURFACES AT THE TIME THE SECONDARY CONTACTS SEPARATE DURING THE OPENING STROKE OF THE BREAKER. This separation should be approximately 5/32" for the DA-50, 3/16" for the DA-75, and 3/16" for the DA-100.

13. This separation can be obtained by first adjusting the contact arm, as per paragraph 11, then adjusting the nut located at the center of the bridging members. To adjust the nut, remove the locking pin and screw down the nut to a point where it just touches the bridge member with the breaker in the closed position, then

back off the nut 1/16" and lock in position with the locking pin. (Note:- 1/16" corresponds to one turn of the nut on DA-50 and DA-75 breaker and to 5/6 of a turn on the DA-100 breaker).

14. It should be borne in mind that satisfactory performance of the breaker depends upon maintaining this important adjustment. It is obvious that after this adjustment is made the eccentric pin setting should not be changed as the adjustment will be lost.

ADJUSTMENT OF ARC CHAMBER

15. Proper alignment of the arc chamber is obtained when the machined surfaces at the rear of the assembly are resting on the spring guard of the breaker pole assembly. The anchor bolts rest in clearance holes in the panel and when loosened may be shifted about to accommodate this adjustment. Once the proper alignment of arc chamber and the breaker pole has been obtained and anchor bolts tightened, the chamber may be subsequently removed by unscrewing the mounting bolts from the front of the arc chamber.

ADJUSTMENT OF THE TRIP BAR ASSEMBLY

16. The trip bar assembly consists of the trip lever of each pole unit, a connecting bar of insulating material and trip knob or bracket to which tripping force may be applied. In order that triggers may respond promptly to tripping forces initiated by overload or shunt tripping devices, it is imperative that the trip bar assembly be as frictionless as possible. Best results are obtained on multipole assemblies when the trip bar is adjusted to provide a maximum of end-play at the bearings.

ADJUSTMENT OF AUXILIARY SWITCH

17. Rotary type auxiliary switches are sturdily constructed and provide a variety of combinations of opening and closing contacts. Positive operation is obtained through an adjustable operating link which connects the rotor crank to the breaker. Proper setting of the auxiliary switch is obtained by adjusting the length of the rotor crank and the length of the operating link so that the rotor crank pin is at a point 45° below the horizontal when the breaker is closed and at a point 45° above the horizontal when the breaker is in the extreme open position.

18. For normal application the assembled relation between crank and rotor causes the contact segment nearest the crank to close when the breaker closes.

ADJUSTMENT OF FIELD DISCHARGE SWITCH

19. When properly adjusted the contacts of the Field Discharge Switch close before the arcing contacts of the breaker separate during the opening stroke, and open before the breaker contacts touch during the closing stroke. Figure 6 shows the approximate position of the Field Discharge Switch at various positions of the breaker contact arm.

20. Adjustment of the position of the switch arm with respect to the breaker contact arm is obtained by varying the length of the operating link by means of the threaded joint.

ADJUSTMENT OF CLOSING LINKAGE

21. To obtain the maximum closing effort from any particular closing magnet, the air gap between the moving and stationary core sections should be as short as practicable at the point in the closing stroke where the force requirement is greatest. The ideal adjustment, therefore, is obtained when the closing linkage is adjusted to provide only the necessary over-travel of the latching roller at the position where the magnet cores come together. An over-travel of 1/32" to 3/32" at the latching roller is recommended which corresponds to an angular movement of 0.5 to 1.5 degrees in the closing lever of the DA-50, 0.4 to 1.3 degrees movement in the DA-75, or 0.3 to 1.0 degree movement in the DA-100. Attempts to adjust for an abnormal amount of over-travel may cause the stops in the breaker mechanism to meet before the magnet cores meet and thereby needlessly cause high stress in the breaker parts.

22. Adjustment of the length of the closing linkage is provided by means of shims in the smaller breaker assemblies and by a threaded joint in the closing link of larger assemblies. Variations in length equal to the thickness of shims may be obtained by loosening the bolted joint and removing or adding shims. In assemblies provided with a threaded joint, variations equal to one-half of the thread pitch may be obtained by removing the pin at the lower end of the link. When loosening the joints, precaution should be taken to prevent the moving core from escaping upward under the action of the retrieving spring, which is enclosed in the core structure.

ADJUSTMENT OF THE CLOSING MAGNET CUT-OFF SWITCH

23. Closing coils are designed to remain energized only momentarily, hence to avoid overheating them provision must be made to interrupt the closing coil circuit immediately after the breaker has latched closed. Unless otherwise specified, a small "Cutoff" switch having contacts which "make" as the cores of the closing magnet come together is mounted on the closing magnet.

24. Proper adjustment of the cut-off switch requires that its contacts be closed and remain closed when the moving core reaches the end of its closing stroke. Due to the inertia of the moving parts of the breaker, moving core and contactor, it is practical to permit the cut-off switch contacts to touch slightly before the core reaches the end of the stroke.

CONTROL SCHEMES

25. Typical control schemes employing a cut-off switch are shown by figures 11, 12 and 13. It will be noted that, where one of these schemes is used, automatic reciprocation of the closing mechanism (known as pumping) cannot occur in the event the cut-off switch or breaker mechanism should lose its adjustment.

26. With the scheme shown as figure 11, the cut-off switch is used to energize the release coil of the type "S-1" relay which permits its contacts to open. Contacts of the "S-1" relay cannot be closed again to re-energize the closing coil circuit until the operating coil circuit of this relay has been opened to permit its armature to reset with the contact arm. Therefore, a single closing operation of the control switch contacts will cause but a single closing operation of the breaker closing mechanism.

27. With the schemes shown as figure 12 and 13, the cut-off switch is used to energize a cut-off (Y) relay which in turn opens the operating coil circuit of the contactor (X), causing the contacts "X" to open the closing coil circuit. The "Y" relay remains energized until the control switch contact is opened and by this means "pumping" is avoided.

SUGGESTIONS FOR LOCATING CAUSE OF IMPROPER OPERATION

28. Failure to Trip From Overload May Be Due To:

a. Improper setting of current calibration.

b. Friction in tripping details as a result of foreign objects or a broken part.

c. Stray-magnetic fields.

29. Failure To Trip By Remote Control May Be Due To:

a. Open circuit due to loose connection.

b. Burned out trip coil.

Overheating of The Breaker May Be Due To:

a. Overload.

b. Improper adjustment of spring pressure on main contacts. (Refer to adjustment of contact arm and contact sequence.

c. Poor condition of main contact surfaces.

31. Excess Burning of Main Contacts May Be Due To:

a. Poor contact at the secondary contacts due to an obstruction, surface condition or inadequate spring pressure.

b. High resistance of the secondary contact circuit due to loose joint at the upper or lower shunt.

c. Inadequate lead of main contact over secondary contact. (See adjustment of contact sequence.)

32. Failure Of The Breaker To Latch-In When Closed May Be Due To:

a. Inadequate overtravel of latch roller beyond the latched position. This may be due to excessive length of closing linkage, which permits the cores of the closing magnet

to make contact before the latching pawl has room to move in behind the roller. For recommended overtravel, refer to paragraph 21.

b. Failure of the latching pawl to retrieve after the roller passes due to excessive friction or due to a damaged pawl spring.

c. Excessive rate of closing which in turn may be due to abnormal voltage on the closing coil or inadequate compression of air in the closing magnet. A greater cushioning effect can be obtained by reducing the size of the exhaust vent located at the lower end of the closing magnet. It should be remembered that the size of the exhaust vent also affects the speed at which the closing link retrieves.

33. Failure Of Latching Roller To Retrieve Behind The Tripping Latch When The Breaker Is Tripped May Be Due To:

a. Excessive friction between piston and cylinder of closing magnet. This may result from the accumulation of dirt or solidified lubricant. Under ordinary operating conditions no lubricant is required.

b. Inadequate retrieving force resulting from a damaged retrieving spring which is located inside the closing magnet assembly.

c. Excessive friction or interference which prevents the latch from receding from the path of the latching roller.

SUGGESTIONS ON REMOVAL OF PARTS

34. Occasionally it is desired to remove parts of the breaker for inspection or to make replacements and the following instructions may be helpful:

a. To remove the contact arm: Remove the pin which connects the toggle link to the contact arm. Disconnect the opening springs from the main frame but leave them connected to the contact arm. With the aid of a long screw driver remove the screws which clamp the flexible shunt to the lower current stud. On the latching pole it is sometimes desirable to remove the trip lever to make the shunt mounting bolts more accessible. By removal of the contact arm hinge pin the complete arm assembly may then be lifted out of the breaker.

b. To remove the moving arcing contact: The three tap bolts should be removed from the back of the moving contact support. These bolts are made of non-magnetic material and substitution by steel bolts should be avoided.

c. To remove the stationary arcing contact: Open the breaker and remove the arc chamber. From the rear of the panel, remove the two 1/4" tap bolts which support the arc tip spring plate. Precautions should be taken to avoid injury when releasing the energy in the partially compressed spring by holding the spring compressed with the aid of a short beam of wood or similar object until both bolts are completely removed. Remove the remaining tap bolt and flat head screw from either one of the stop brackets which permits the removal of the stop bracket and the guide pin. By tilting the lower edge of the contact platform away from the panel the secondary contact springs and insulating washers may be removed. With a screw driver perform the final operation of removing the bolts which hold the enclosed shunt from the upper current stud.

d. To remove the coil from the closing magnet: Remove the cover from the front of the assembly. Remove the side plates leaving the auxiliary switch and the wiring to it intact. Disconnect wires from the closing coil and from the cut-off switch. With the breaker in the tripped position provide temporary levers or other means to restrain the moving core as it is being expelled by the enclosed retrieving spring, before disconnecting the closing linkage between it and the breaker mechanism. Disconnect the closing linkage and by absorbing the energy from the enclosed spring through the temporary restraining means, allow the moving core to be slowly expelled. The stationary core-section and cylinder wall can be removed as a unit from the bottom of the magnet assembly by removing the bolts in the outer bolt circle. After the magnet core is removed, the coil is removable from the front.

e. To remove the oil pot of the Inverse-time-limit on the DA-50 breaker:

(1) Loosen both knobs on the overload dash pot.

(2) Place both knobs straight to the left hand side of the breaker facing panel.

(3) Turn both knobs in unison to the extreme right, looking at the bottom of the oil pot, and continue the lower knob to the right until it is near the panel.

(4) Then, holding the lower knob near the panel, turn the upper knob to left until the two knobs are 180° apart.

(5) Pull the lower portion, onto which the lower knob is attached, downward approximately 1/4".

(6) Turn the upper knob to extreme right as far as possible and then turn the lower knob to the left until it is directly beneath the upper knob.

(7) Remove the lower oil pot by pulling straight downward.

(8) To replace the dashpot it is merely necessary to reverse the above procedure.

SERIES OVERLOAD TRIP ATTACHMENTS

35. Series overload trip attachments are used to trip the circuit breaker whenever the current through the breaker exceeds a predetermined value. All forms of this device include a conductor of one or more turns connected in series with the breaker contacts, a stationary magnetic circuit, and a movable iron armature. The armature is mounted in such a way that as it moves under magnetic attraction to reduce the air gap, it provides the force to trip the breaker latch. The amount of current required to start the armature is a function of air gap length and upon this principle all overload trips for DA breakers are calibrated.

36. The tripping magnet is used at its best efficiency when adjusted so that, of the total travel of the armature, that part used to move the breaker trigger should be just enough to trip the trigger free of the latch lever. With this adjustment the maximum amount of armature travel is used to obtain momentum for tripping the breaker.

37. Each overload trip unit is calibrated on the breaker pole at the factory. Therefore, care should be taken not to interchange trip details with other breaker poles.

38. Powerful stray magnetic fields do affect the calibration points to some extent on the larger breakers. Where the bus arrangement of the switchboard is known, the breakers are calibrated at the factory with the same arrangement.

39. All the overload trip devices reset themselves automatically. That is, after tripping, they automatically return to their original position.

40. Three classes of series overload trips are used to provide the characteristics required for ordinary applications. These trips may be classified as (1) Non-adjustable Short-circuit trips, (2) Instantaneous trip and (3) Inverse Time Limit Trip Attachment.

NON-ADJUSTABLE SHORT - CIRCUIT TRIP ATTACHMENT

41. For a general description of series overload trip attachments, refer to paragraphs 35 to 39.

42. Short-circuit trip attachments are designed to trip instantaneously at some relatively high current value. The trip setting is non-adjustable after being set at the factory. Normally the trip setting bears the following relation to the breaker rating:

Breaker Rating (30°C.) in Amperes	Trip Setting in Amperes
up to 600	9000 ± 10%
800 to 2000	15 times bkr. rating ± 10%
2500 to 6000	12 times bkr. rating ± 10%
8000 and above	75,000 ± 10%

INSTANTANEOUS TRIP ATTACHMENT

43. For a general description of series overload trips, refer to paragraphs 35 to 39.

44. Instantaneous trip attachments (see Fig. 7) are designed to be calibrated on currents close to the breaker rating. The standard range of calibration is 100% to 200% of the normal 30°C. rating of the breaker. Unless otherwise specified, the five main points, 100%, 125%, 150%, 175% and 200% are stamped on the scale plate.

INVERSE TIME LIMIT ATTACHMENT

45. For a general description of series overload trip attachments, refer to paragraphs 35 to 39.

46. The Inverse-time-limit attachment (See Fig. 10) consists of a tripping device with the addition of a time delay device which prevents tripping on relatively small overloads which last but a short time.

47. The time delay feature is obtained by the sucker action between a smooth surfaced metal disc which is attached to the overload armature and which normally rests on the smooth bottom surface of a pot containing a small quantity of oil (approximately 1/8" deep). The resulting sucker action retards the starting of the overload armature, the time of delay being approximately inverse to the magnitude of the overload. For characteristic curves, see Fig. 8.

48. A limited variation in the time delay can be obtained by turning the pot which varies the amount of surface in contact between the sucker and pot. Further variation can be obtained by using oils of different viscosities.

49. The overload trip device is calibrated without oil in the pot. The calibration range and scale markings for the standard Inverse-time-limit attachment is the same as for the Instantaneous Trip Attachment. (Refer to paragraph 44).

50. To insure reliable performance of the time delay device, it is important that oil in the pot be kept clean. A single particle of dirt between the sucker surfaces may greatly reduce the time delay. To remove imperfections in the sucker surfaces due to bruising or other causes, it is suggested that all high spots be removed with a scraper. A paper washer is placed between the sucker surfaces to protect them during shipment. This washer should be removed when placing the breaker in service and before oil is placed in the pot.

51. For instructions on removing the oil pot of the DA-50 Breaker, refer to paragraph 34-e.

SHUNT TRIP ATTACHMENT

52. The shunt trip attachment is designed to trip the breaker when the trip coil is energized by an auxiliary circuit, thus providing for remote control and various interlocking arrangements. Shunt trip coils are designed to remain energized only momentarily, hence provision should be made to interrupt the shunt trip circuit immediately after the breaker has been tripped. It is common practice to obtain this result by means of an auxiliary switch having contacts which open as the breaker opens.

UNDERVOLTAGE TRIP ATTACHMENT

53. The Undervoltage Trip Attachment (See Fig. 9) is used as a means for tripping the breaker when voltage applied to its coil drops below a predetermined value. Having this characteristic the Under-voltage Trip Attachment is adaptable to control schemes where a positive tripping means is desired in case of failure of control voltage. Energy for tripping the breaker is produced by a spring which must be reset mechanically through links attached to the breaker.

54. The important elements of this device function as follows: When energized at rated voltage, Magnetic Force holds the armature to the stationary core against the action of the stressed tripping spring. The stronger reset spring works in opposition to the tripping spring, but by means of the reset linkage the reset lever is rotated by the breaker, as it closes, to a position which clears the "drop-out" movement of the armature. If the applied voltage decreases to a value at which the magnetic attraction for the armature is less than the force exerted by the tripping spring, the armature "drops out" and the breaker is tripped by energy from the tripping spring.

55. For applications which require a time delay feature to prevent the breaker from being tripped by momentary dips in applied voltage, an oil-sucker attachment is provided as shown. For further information concerning this Inverse-time-limit device, refer to paragraphs 46 to 50.

56. When adjustments are to be made on an under voltage trip attachment, it is suggested that they be made in the order given below.

57. To adjust the relation between the armature and the time delay attachment, partially back out the upper adjusting screw (item 7), and with coil de-energized and reset lever (item 36) held downward, hold sucker stem (item 53) down and adjust lower screw (item 6) to obtain an air gap of 1/16" at the upper end of the armature. Next release reset lever and adjust upper screw (item 7) to remove contact between armature and the end of screw (item 6).

58. To adjust for drop-out at a given voltage, first apply rated voltage and depress reset lever (by closing breaker if practical) then reduce voltage to the desired drop-out value and adjust the screw (item 16) to the position which causes the armature to drop out. For normal applications the device is adjusted to drop out at a voltage of 40% to 60% of the rated voltage.

REVERSE CURRENT TRIP ATTACHMENT

59. The reverse current trip attachment is used to trip the breaker when the direction of current flow through the breaker is reversed.

60. The reverse current trip mechanism consists of a stationary magnet energized by a coil in series with the breaker contacts and a movable iron armature energized by a shunt coil as shown in Fig. 14. In the attachment rated 800 to 1600 amperes the magnetic circuits are energized in the reverse manner. In either arrangement the armature is pivoted between two pairs of poles. When the series coil current is flowing in the normal direction the armature tends to rotate in one direction but is restrained by an adjustable cam. When the series current reverses the armature is rotated in the opposite direction and provides the force to trip the breaker with which it is mounted. After tripping the armature is returned to its original position by a resetting spring.

61. Tripping at predetermined values of reverse current is obtained by adjusting the relation between the armature and the pole faces by means of the cam. Standard calibration points are marked on the scale plate for currents representing 5, 10, 15, 20, and 25% of the breaker rating.

62. To reset the attachment it is necessary only to open the shunt coil circuit. This is usually accomplished by means of the breaker auxiliary switch.

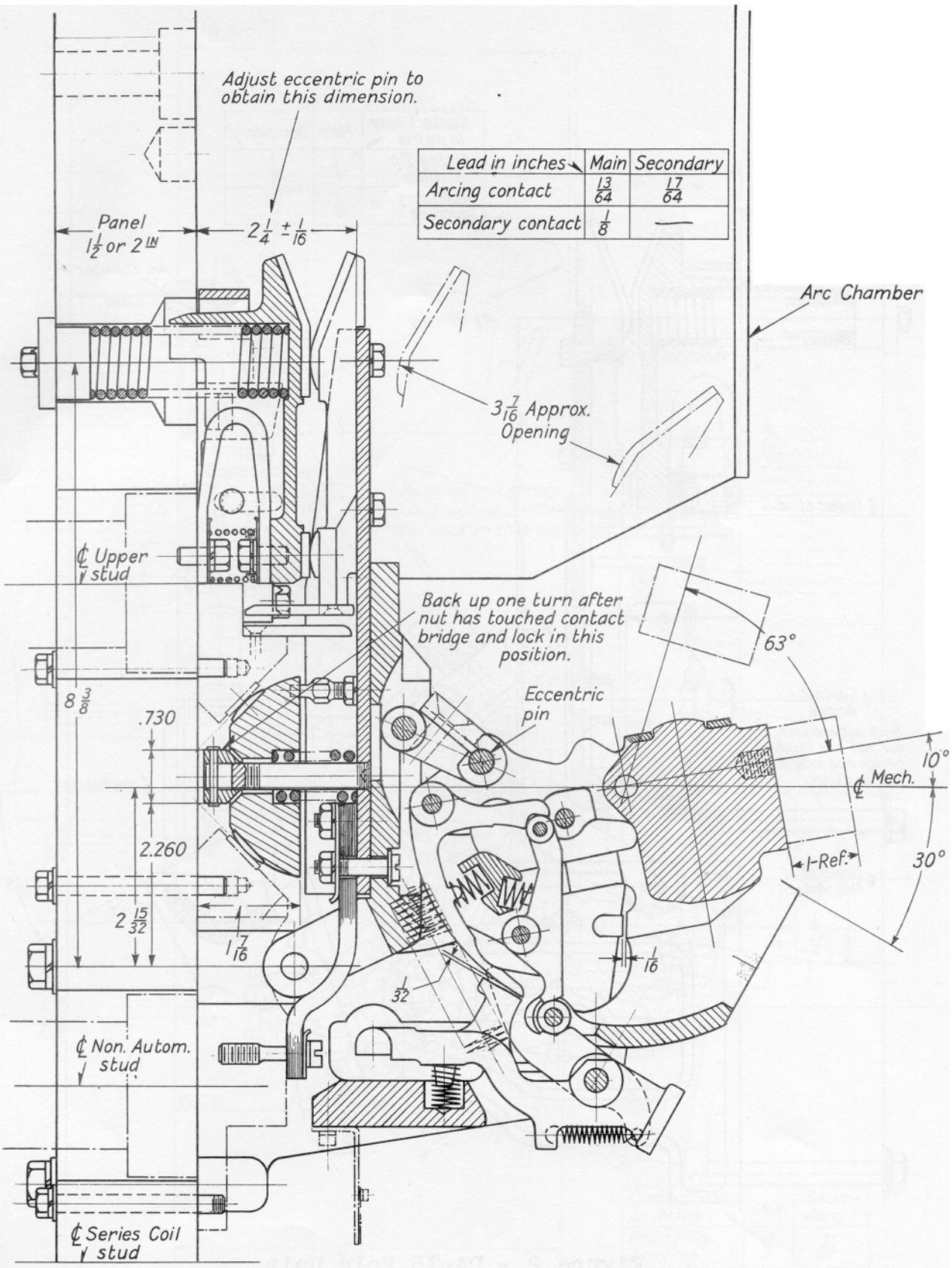

Figure 1 - DA-50 Pole Units

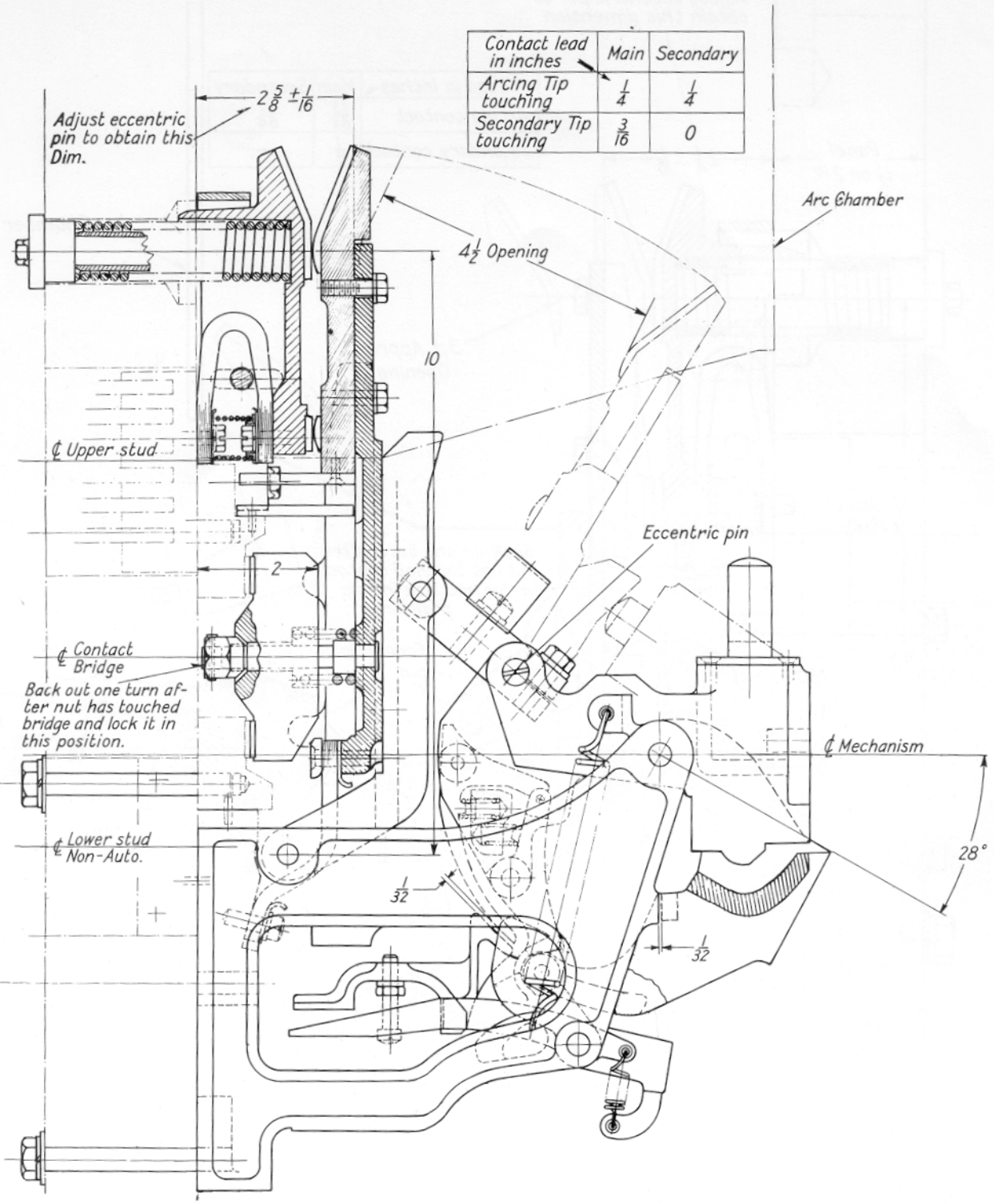

Figure 2 - DA-75 Pole Unit

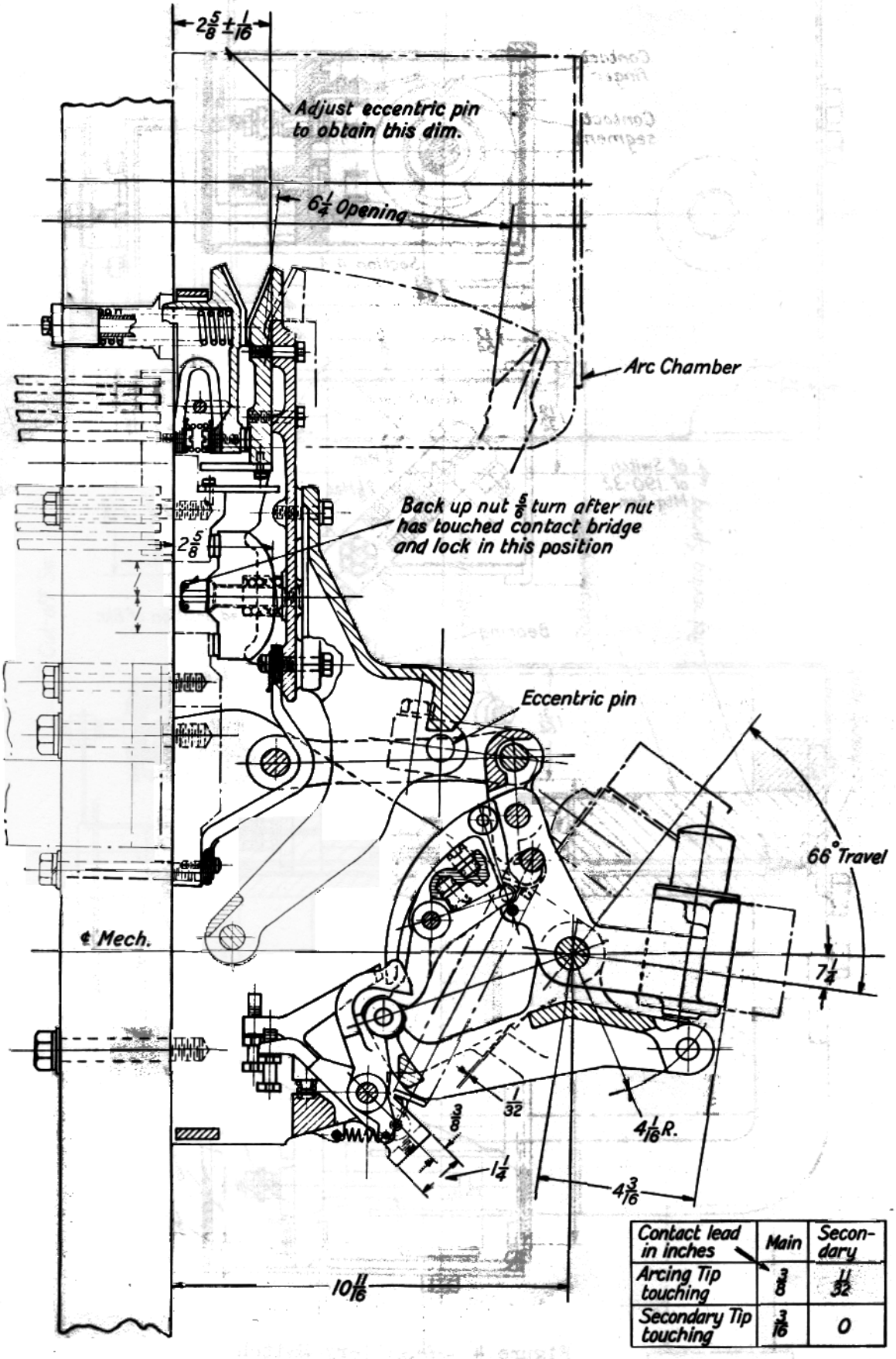

Contact lead in inches	Main	Secondary
Arcing Tip touching	3/8	11/32
Secondary Tip touching	3/16	0

Figure 3 - DA-100 Pole Unit

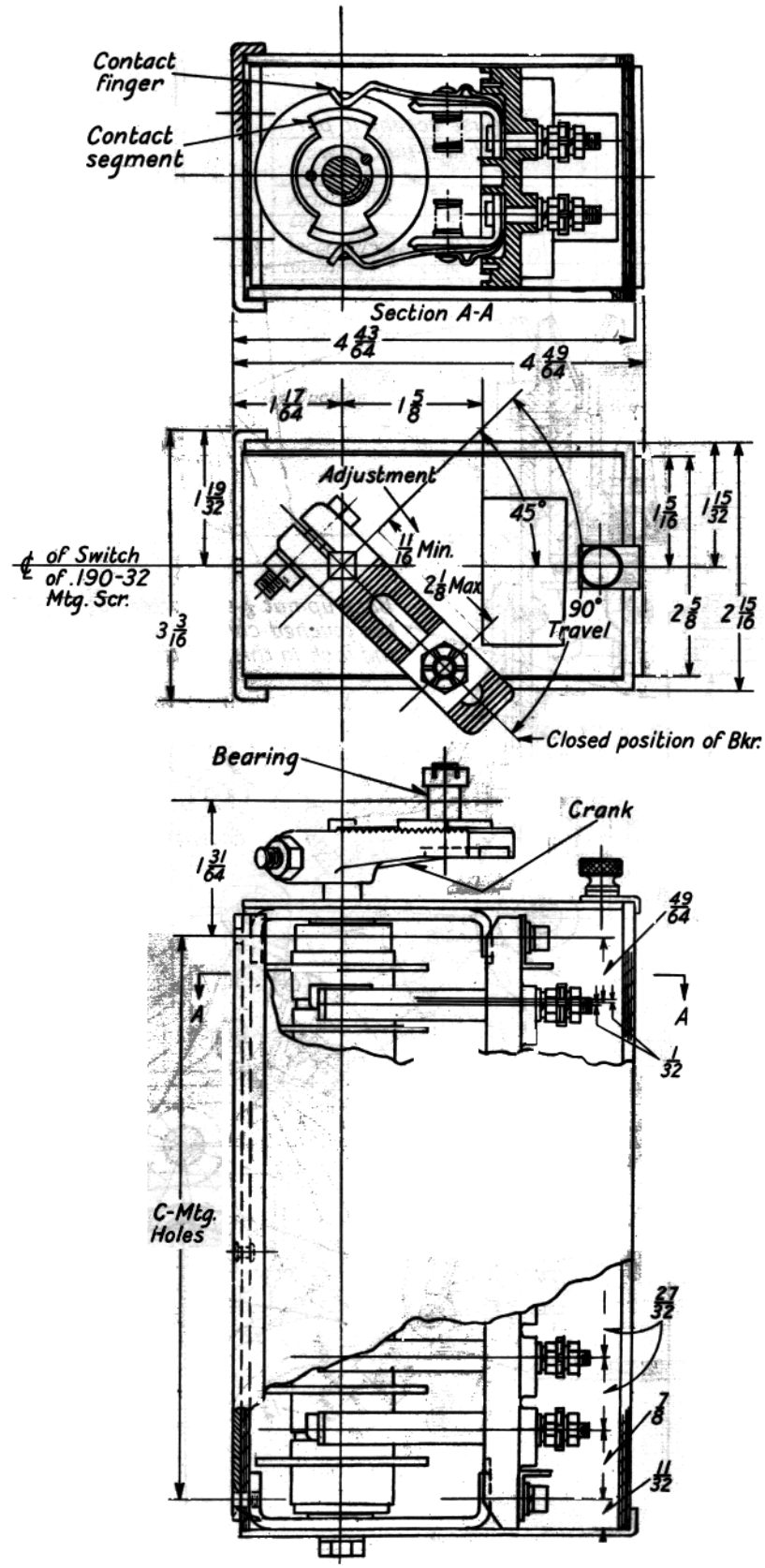

Figure 4 - Auxiliary Switch

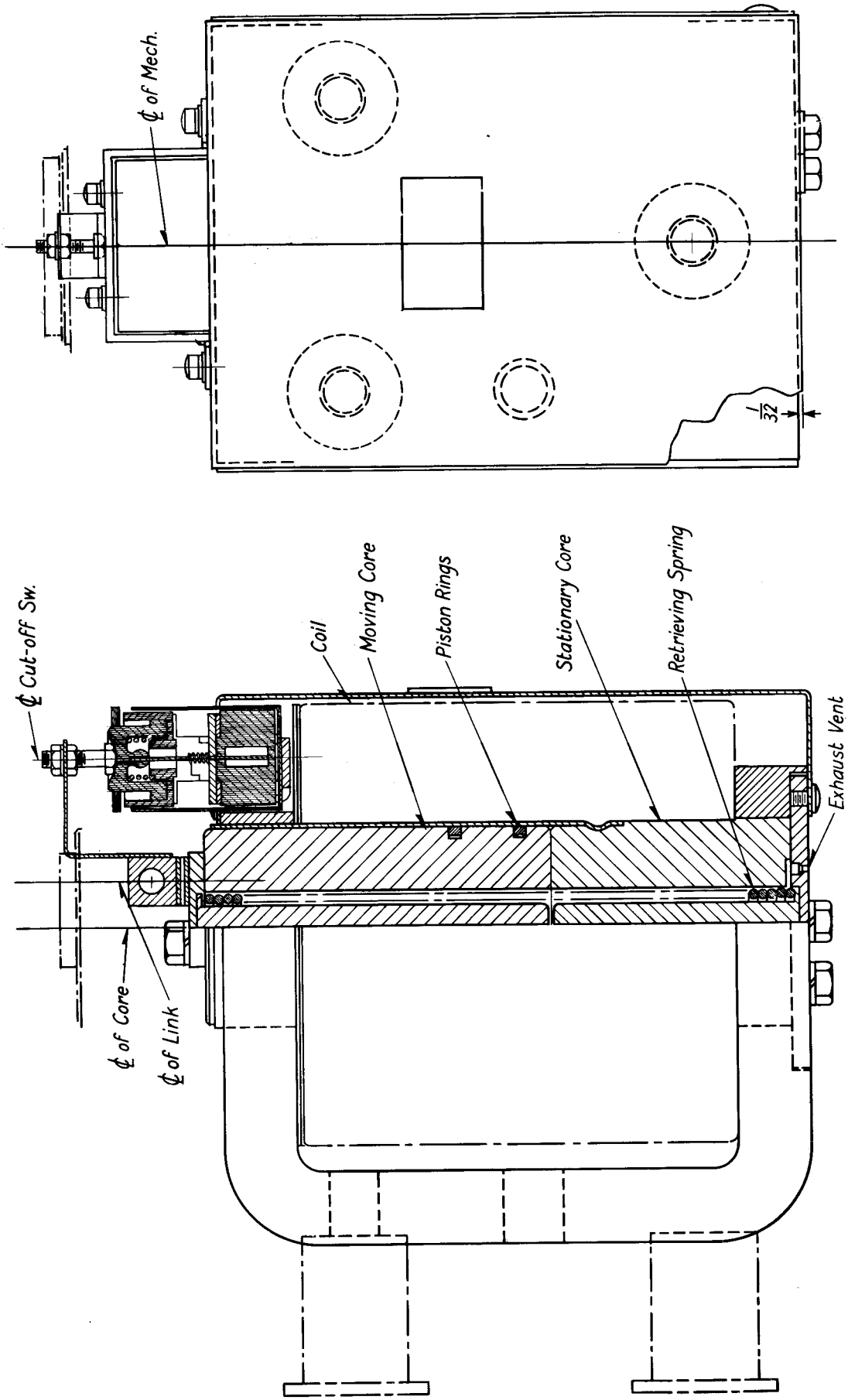

Figure 5 - 3-inch Closing Magnet

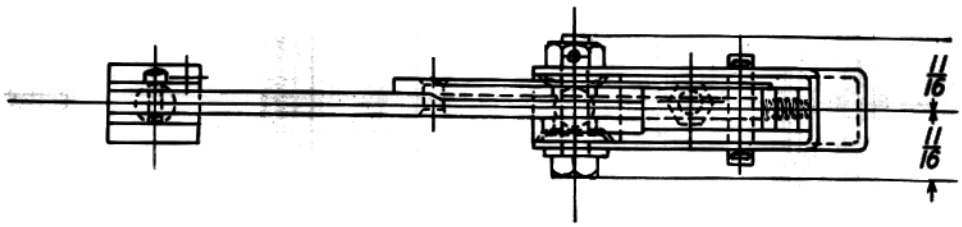

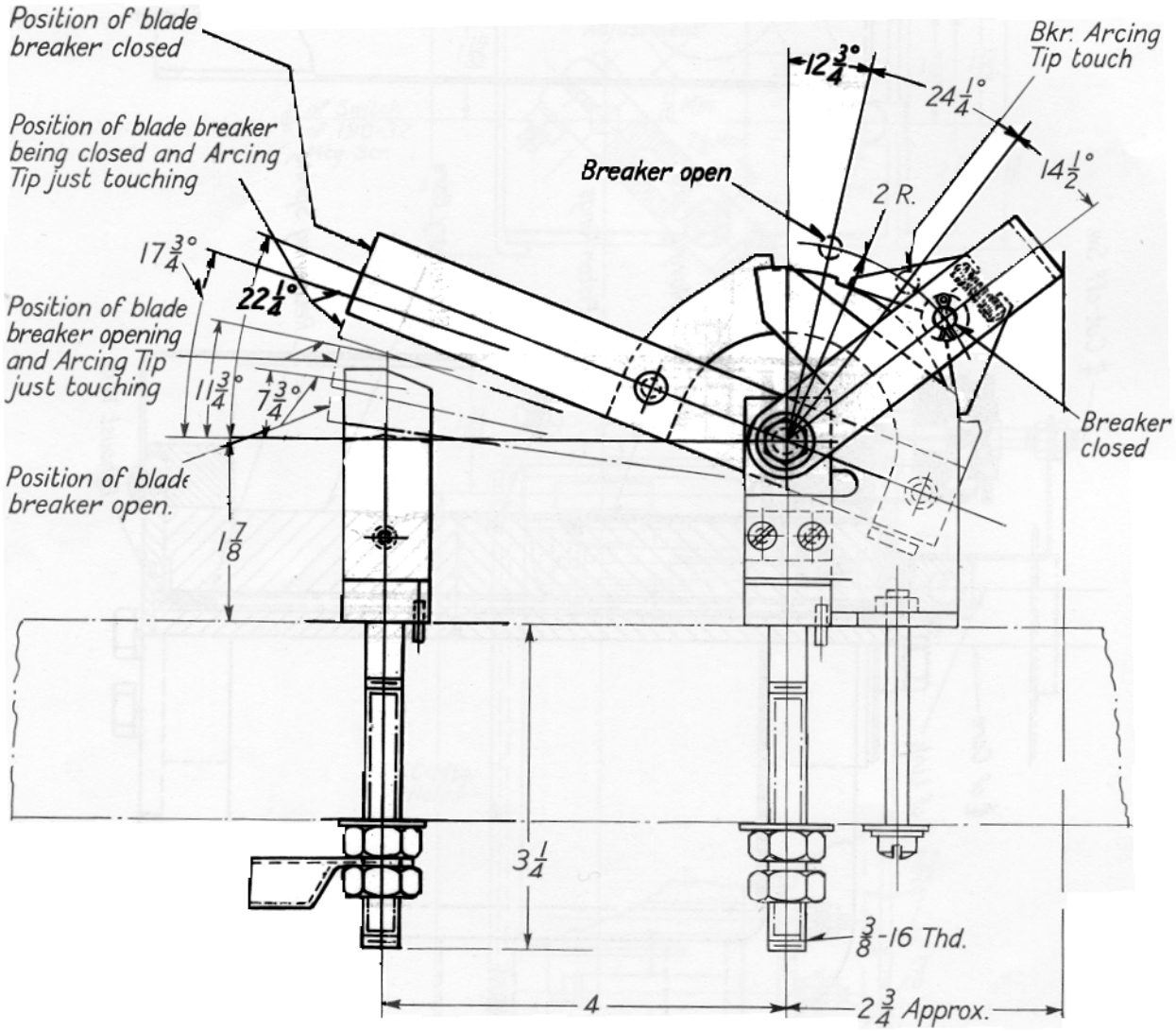

Figure 6 - Field Discharge Switch

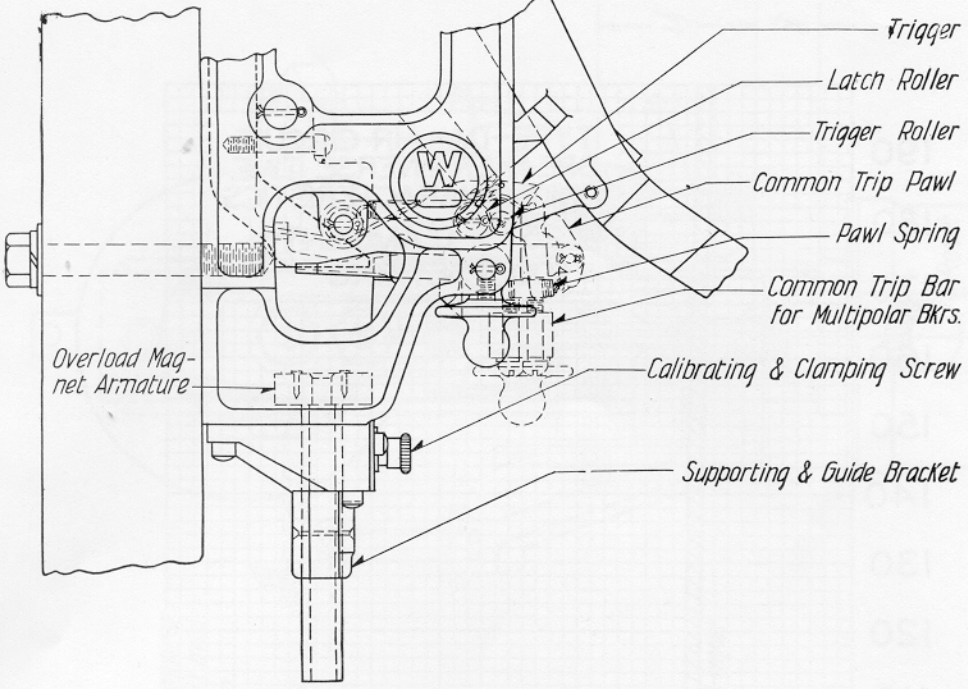

Figure 7 - Instantaneous Trip Attachment

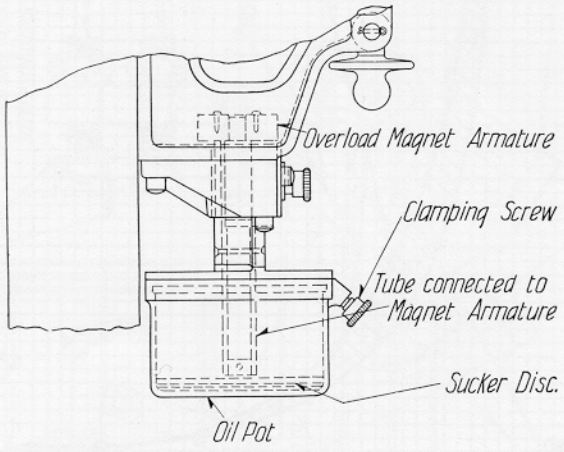

Figure 10 - Inverse Time Limit Overload Attachment

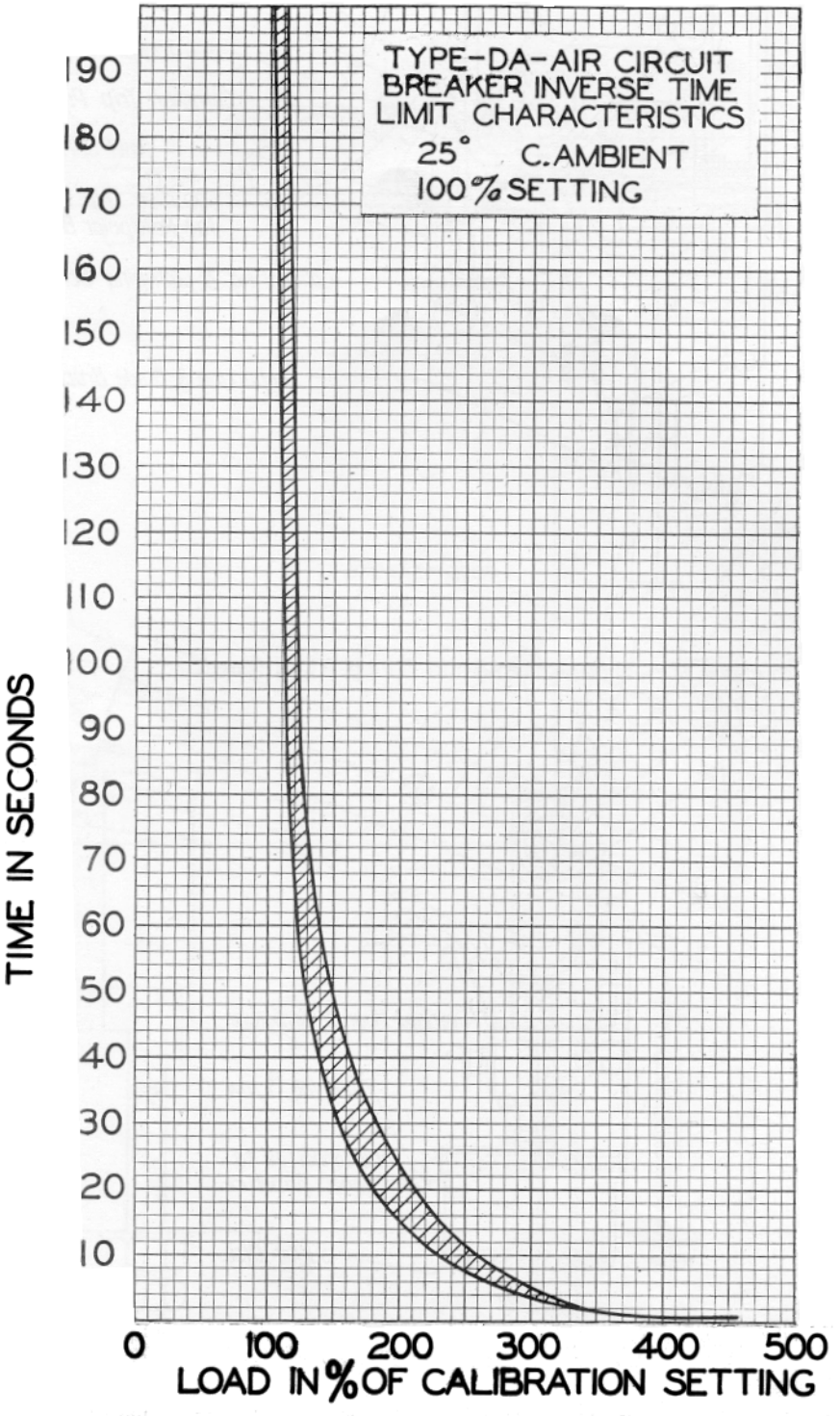

75% Time Limit Setting will be approximately 75% of readings.
50% Time Limit Setting will be approximately 50% of readings.
25% Time Limit Setting will be approximately 25% of readings.
0% Time Limit Setting will be approximately 2% of readings.

Figure 8 - Characteristic Curves-Inverse Time Limit Device

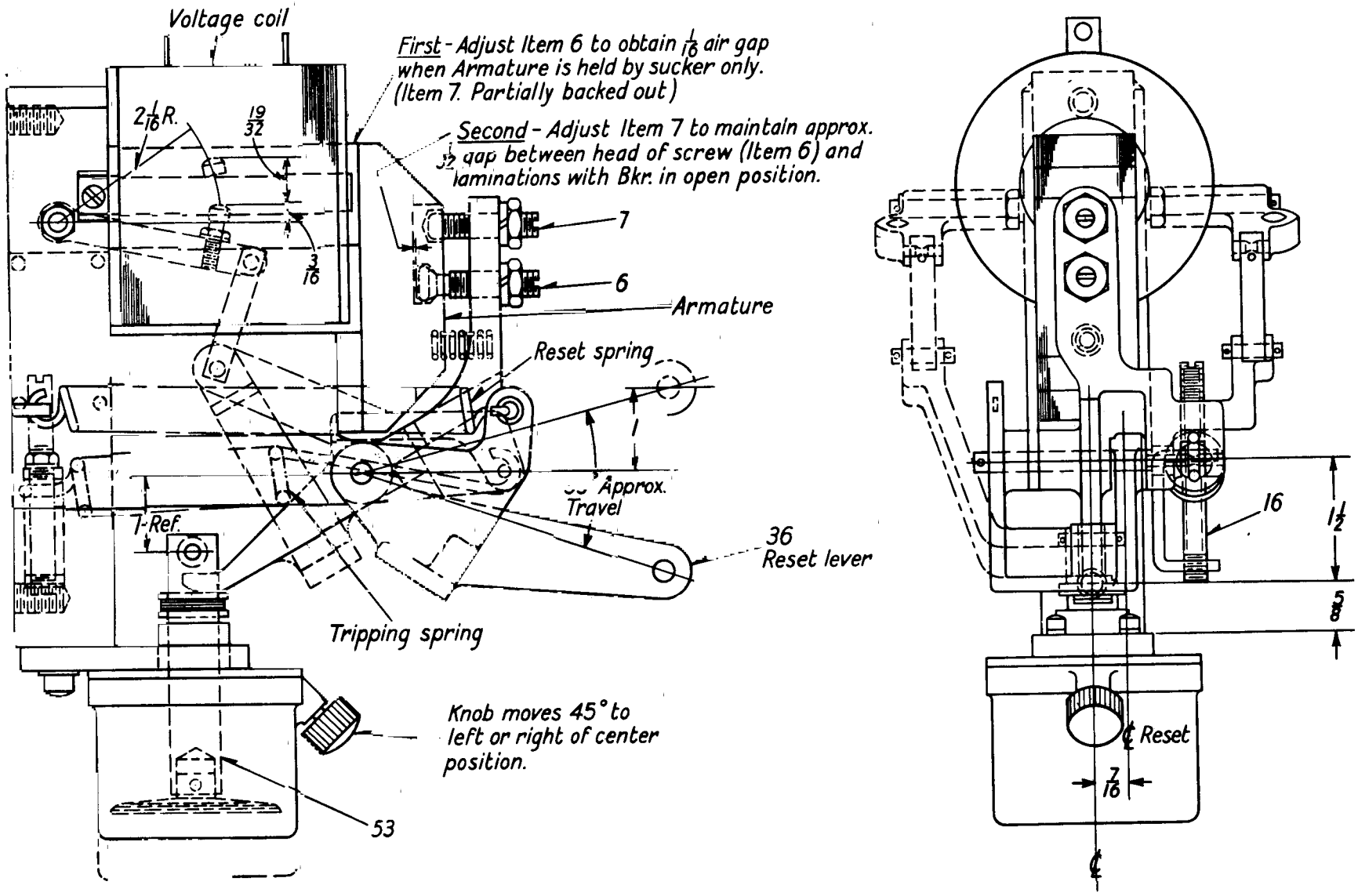

Figure 9 Undervoltage Trip Attachment

DIAGRAM INFORMATION

TYPE DA AIR CIRCUIT BREAKER CONTROL SCHEMES

Auxiliary Shown for Open Breaker
Relay Contacts Shown for De-energized Relay

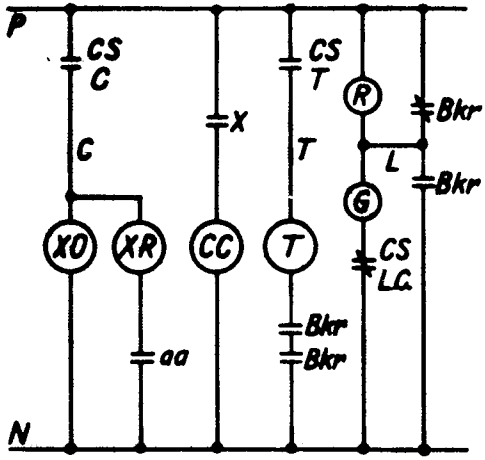

Figure 11 - D-c. Control, S-1 Trip Free Relay, Breaker Auxiliary Switch, Cut-off Switch (aa)

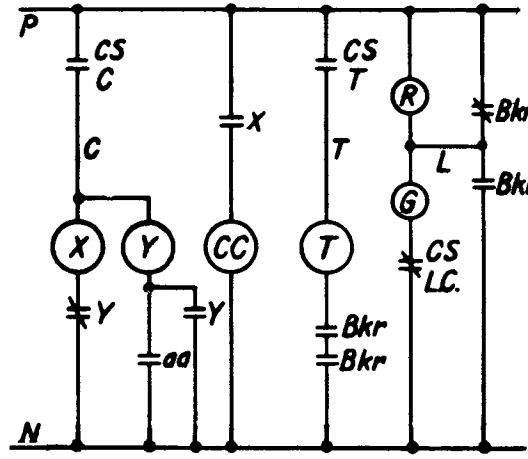

Figure 12 - D-c. Control, X-Control Relay, Y-Cut-off Relay, Breaker Auxiliary Switch, Cut-off Switch (aa)

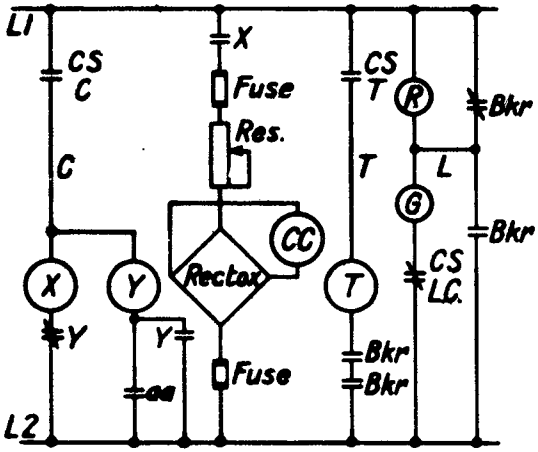

Figure 13 - A-c. Control, X-Control Relay, Y-Cut-off Relay, Breaker Auxiliary Switch, Cut-off Switch (aa)

LEGEND

CS - Control Switch; C-Close; T-Trip;

L.C.-Lamp Cutout

CC - Breaker Closing Coil

T - Breaker Trip Coil

XO - S-1 Control Relay Operating Coil

XR - S-1 Control Relay Release Coil

X - Control Relay Y - Cutoff Relay

⊣⊢ - Contact or Auxiliary Switch Closed when Device Is Energized or Closed

⊣/⊢ - Contact or Auxiliary Switch Open when Device Is Energized or Closed

⊣aa⊢ - Contact Closes when Breaker or Mechanism Is in Operated Position

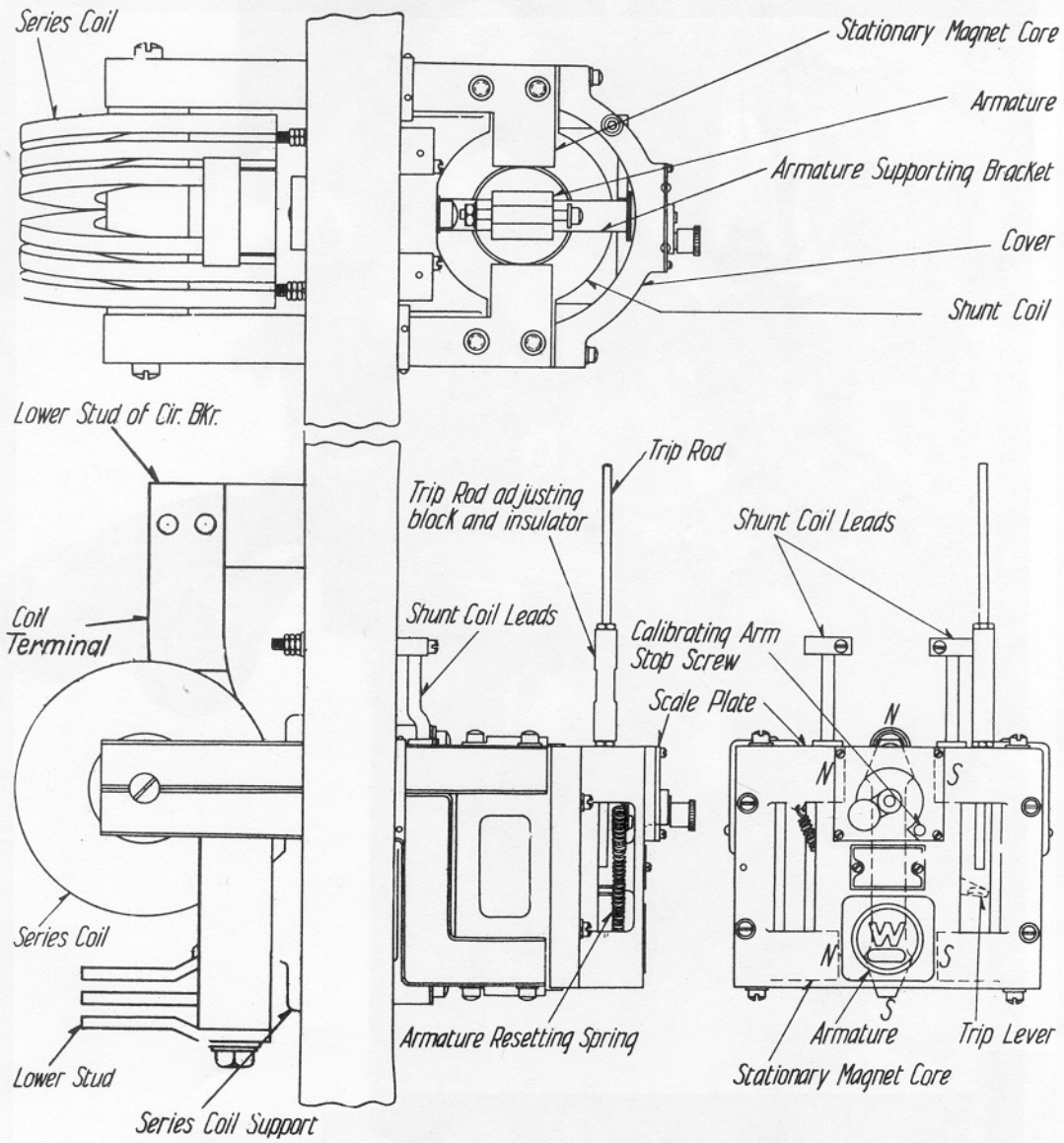
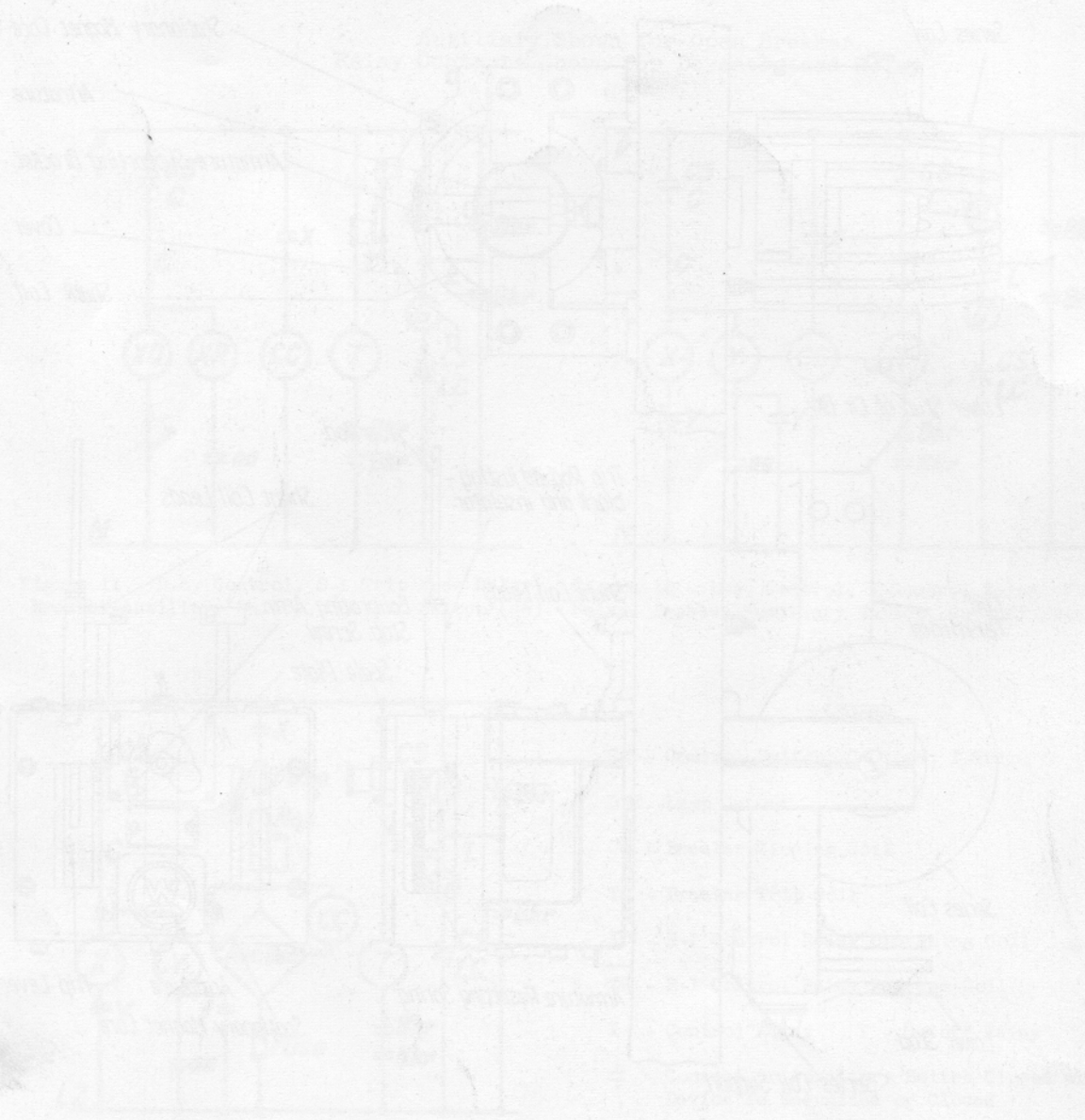
Figure 14 - Reverse Current Trip Attachment